Cambridge International AS & A Level

Cambridge International Examinations
Cambridge International Advanced Subsidiary and Advanced Level

CANDIDATE NAME									
CENTRE NUMBER						CANDIDATE NUMBER			

3078689306

PHYSICS **9702/22**

Paper 2 AS Structured Questions **May/June 2014**

1 hour

Candidates answer on the Question Paper.

No Additional Materials are required.

READ THESE INSTRUCTIONS FIRST

Write your Centre number, candidate number and name on all the work you hand in.
Write in dark blue or black pen.
You may use an HB pencil for any diagrams or graphs.
Do not use staples, paper clips, glue or correction fluid.
DO **NOT** WRITE IN ANY BARCODES.

Answer **all** questions.

Electronic calculators may be used.
You may lose marks if you do not show your working or if you do not use appropriate units.

At the end of the examination, fasten all your work securely together.
The number of marks is given in brackets [ ] at the end of each question or part question.

This document consists of **14** printed pages and **2** blank pages.

© UCLES 2014

CAMBRIDGE International Examinations

Data

speed of light in free space, $c = 3.00 \times 10^{8}\ \text{m s}^{-1}$

permeability of free space, $\mu_0 = 4\pi \times 10^{-7}\ \text{H m}^{-1}$

permittivity of free space, $\varepsilon_0 = 8.85 \times 10^{-12}\ \text{F m}^{-1}$

$$\left(\frac{1}{4\pi\varepsilon_0} = 8.99 \cdot\ 10^{9}\ \text{m F}^{-1}\right)$$

elementary charge, $e = 1.60 \times 10^{-19}\ \text{C}$

the Planck constant, $h = 6.63 \times 10^{-34}\ \text{J s}$

unified atomic mass constant, $u = 1.66 \times 10^{-27}\ \text{kg}$

rest mass of electron, $m_e = 9.11 \times 10^{-31}\ \text{kg}$

rest mass of proton, $m_p = 1.67 \times 10^{-27}\ \text{kg}$

molar gas constant, $R = 8.31\ \text{J K}^{-1}\ \text{mol}^{-1}$

the Avogadro constant, $N_A = 6.02 \times 10^{23}\ \text{mol}^{-1}$

the Boltzmann constant, $k = 1.38 \times 10^{-23}\ \text{J K}^{-1}$

gravitational constant, $G = 6.67 \times 10^{-11}\ \text{N m}^2\ \text{kg}^{-2}$

acceleration of free fall, $g = 9.81\ \text{m s}^{-2}$

© UCLES 2014

Formulae

uniformly accelerated motion, $s = ut + \frac{1}{2}at^2$
$v^2 = u^2 + 2as$

work done on/by a gas, $W = p\Delta V$

gravitational potential, $\phi = -\frac{Gm}{r}$

hydrostatic pressure, $p = \rho gh$

pressure of an ideal gas, $p = \frac{1}{3}\frac{Nm}{V}\langle c^2 \rangle$

simple harmonic motion, $a = -\omega^2 x$

velocity of particle in s.h.m., $v = v_0 \cos \omega t$
$v = \pm \omega \sqrt{(x_0^2 - x^2)}$

electric potential, $V = \frac{Q}{4\pi\varepsilon_0 r}$

capacitors in series, $1/C = 1/C_1 + 1/C_2 + \ldots$

capacitors in parallel, $C = C_1 + C_2 + \ldots$

energy of charged capacitor, $W = \frac{1}{2}QV$

resistors in series, $R = R_1 + R_2 + \ldots$

resistors in parallel, $1/R = 1/R_1 + 1/R_2 + \ldots$

alternating current/voltage, $x = x_0 \sin \omega t$

radioactive decay, $x = x_0 \exp(-\lambda t)$

decay constant, $\lambda = \frac{0.693}{t_{\frac{1}{2}}}$

© UCLES 2014

[Turn over

Answer **all** the questions in the spaces provided.

1 **(a)** Show that the SI base units of power are $kg\,m^2\,s^{-3}$.

[3]

(b) The rate of flow of thermal energy $\frac{Q}{t}$ in a material is given by

$$\frac{Q}{t} = \frac{CAT}{x}$$

where A is the cross-sectional area of the material,
T is the temperature difference across the thickness of the material,
x is the thickness of the material,
C is a constant.

Determine the SI base units of C.

base units ..... [4]

2 A coin is made in the shape of a thin cylinder, as shown in Fig. 2.1.

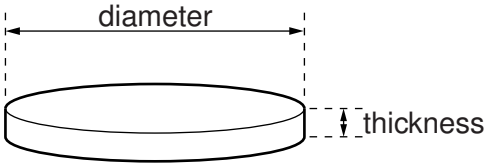

Fig. 2.1

Fig. 2.2 shows the measurements made in order to determine the density ρ of the material used to make the coin.

quantity	measurement	uncertainty
mass	9.6 g	± 0.5 g
thickness	2.00 mm	± 0.01 mm
diameter	22.1 mm	± 0.1 mm

Fig. 2.2

(a) Calculate the density ρ in kg m^{-3}.

ρ = ...kg m^{-3} [3]

(b) **(i)** Calculate the percentage uncertainty in ρ.

percentage uncertainty = ... [3]

(ii) State the value of ρ with its actual uncertainty.

ρ = ... ± ..... kg m^{-3} [1]

3 **(a)** State Newton's first law of motion.

.....

..... [1]

(b) A box slides down a slope, as shown in Fig. 3.1.

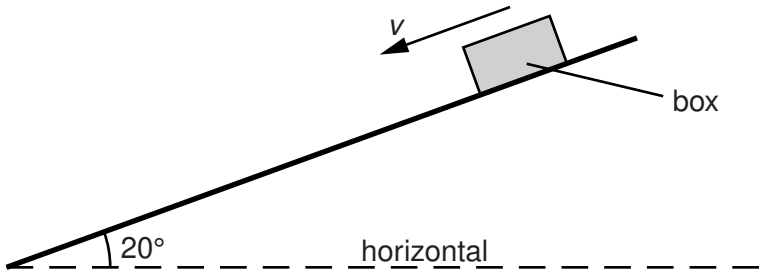

Fig. 3.1

The angle of the slope to the horizontal is 20°. The box has a mass of 65 kg. The total resistive force R acting on the box is constant as it slides down the slope.

(i) State the names and directions of the other two forces acting on the box.

1. .....

2. .....
[2]

(ii) The variation with time t of the velocity v of the box as it moves down the slope is shown in Fig. 3.2.

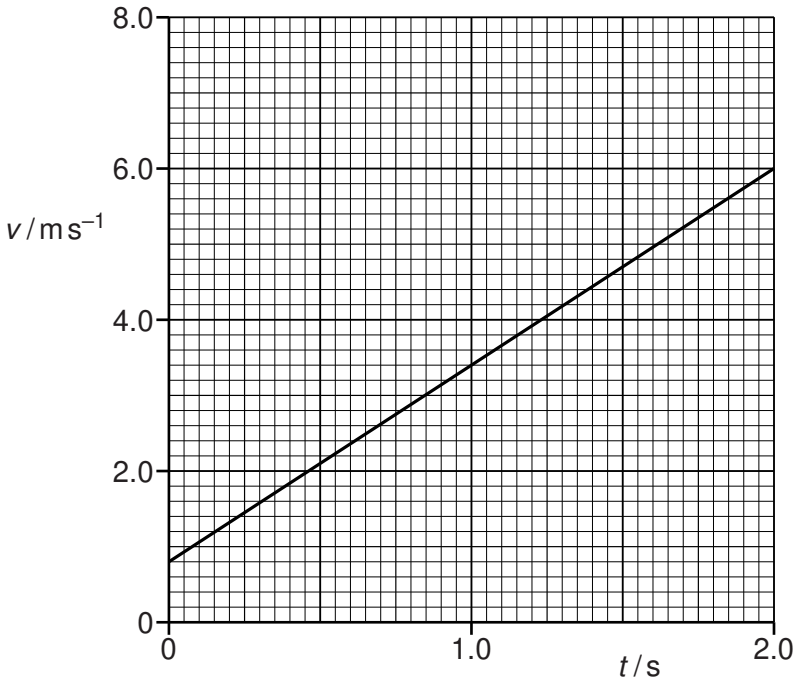

Fig. 3.2

1. Use data from Fig. 3.2 to show that the acceleration of the box is 2.6 $m\,s^{-2}$.

[2]

2. Calculate the resultant force on the box.

resultant force = ... N [1]

3. Determine the resistive force R on the box.

R = ... N [3]

4 **(a)** Explain what is meant by *gravitational potential* energy and *kinetic* energy.

gravitational potential energy: .....

.....

kinetic energy: .....

.....

[2]

(b) A ball of mass 400 g is thrown with an initial velocity of 30.0 m s^{-1} at an angle of 45.0° to the horizontal, as shown in Fig. 4.1.

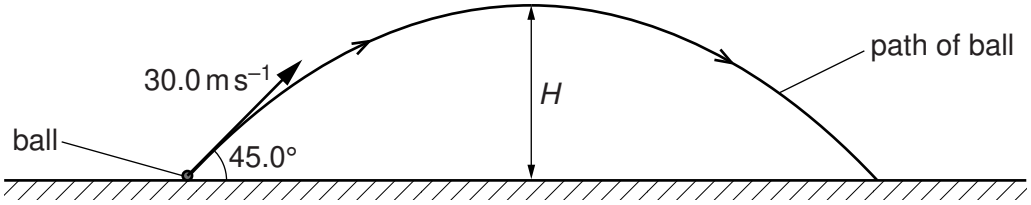

Fig. 4.1

Air resistance is negligible. The ball reaches a maximum height *H* after a time of 2.16 s.

(i) Calculate

1. the initial kinetic energy of the ball,

kinetic energy = ... J [3]

2. the maximum height *H* of the ball,

H = ... m [2]

© UCLES 2014

3. the gravitational potential energy of the ball at height *H*.

potential energy = ... J [2]

(ii) **1.** Determine the kinetic energy of the ball at its maximum height.

kinetic energy = ... J [1]

2. Explain why the kinetic energy of the ball at maximum height is not zero.

.....

..... [1]

BLANK PAGE

© UCLES 2014

5 **(a)** Define the *Young modulus*.

.....

..... [1]

(b) Two wires P and Q of the same material and same original length l_0 are fixed so that they hang vertically, as shown in Fig. 5.1.

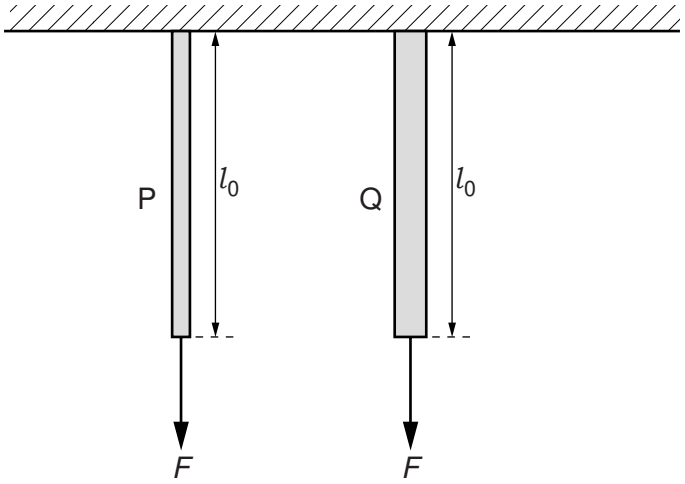

Fig. 5.1 (not to scale)

The diameter of P is d and the diameter of Q is $2d$. The same force F is applied to the lower end of each wire.

Show your working and determine the ratio

(i) $\frac{\text{stress in P}}{\text{stress in Q}}$,

ratio = ... [2]

(ii) $\frac{\text{strain in P}}{\text{strain in Q}}$.

ratio = ... [2]

© UCLES 2014

6 A battery is connected in series with resistors X and Y, as shown in Fig. 6.1.

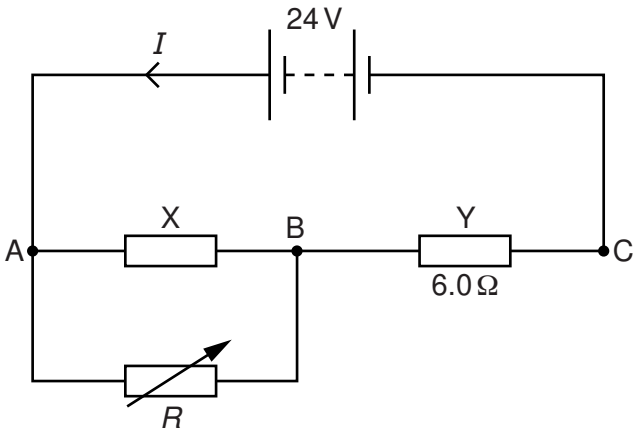

Fig. 6.1

The resistance of X is constant. The resistance of Y is 6.0 Ω. The battery has electromotive force (e.m.f.) 24 V and zero internal resistance. A variable resistor of resistance R is connected in parallel with X.

The current I from the battery is changed by varying R from 5.0 Ω to 20 Ω. The variation with R of I is shown in Fig. 6.2.

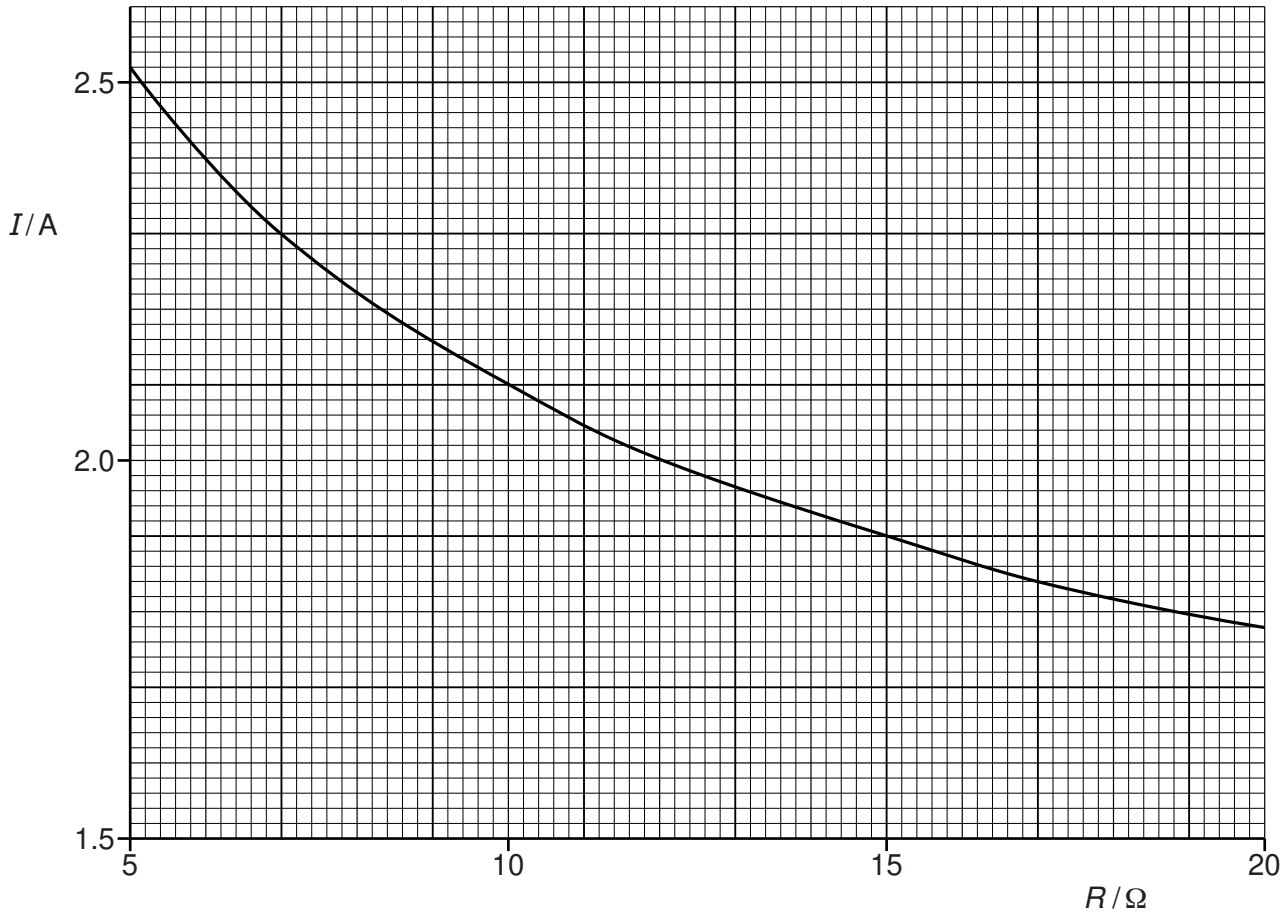

Fig. 6.2

© UCLES 2014

(a) Explain why the potential difference (p.d.) between points A and C is 24 V for all values of *R*.

.....

..... [1]

(b) Use Fig. 6.2 to state and explain the variation of the p.d. across resistor Y as *R* is increased. Numerical values are not required.

.....

.....

..... [2]

(c) For $R = 6.0\,\Omega$,

(i) show that the p.d. between points A and B is 9.6 V,

[2]

(ii) calculate the resistance of X,

resistance = ... Ω [3]

(iii) calculate the power provided by the battery.

power = ... W [2]

(d) State and explain qualitatively how the power provided by the battery changes as the resistance *R* is increased.

.....

..... [1]

7 A laser is placed in front of a double slit, as shown in Fig. 7.1.

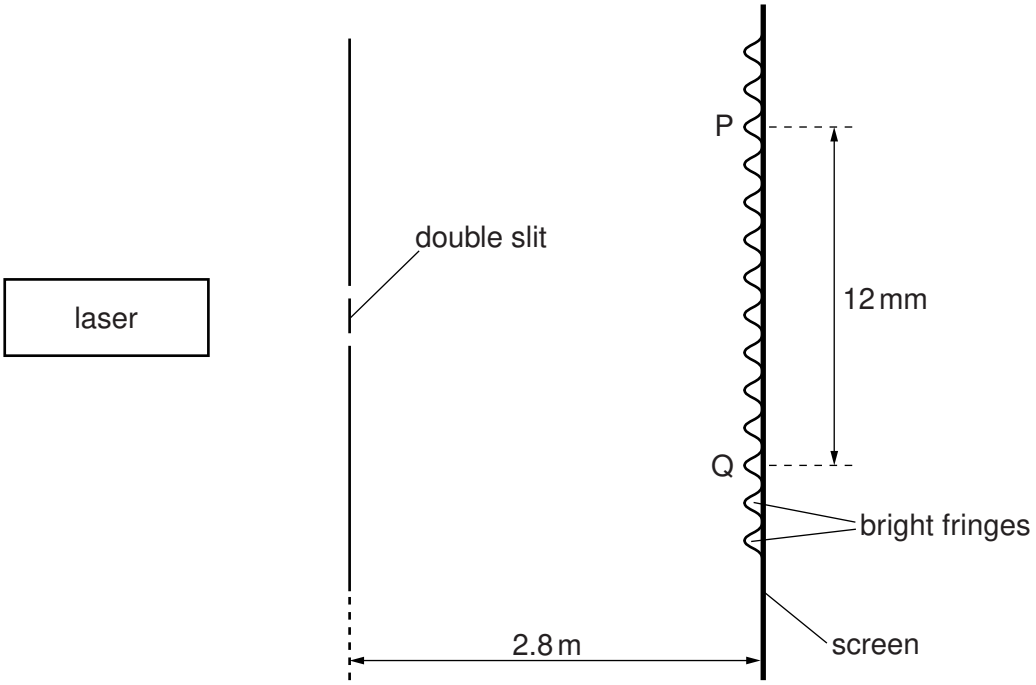

Fig. 7.1 (not to scale)

The laser emits light of frequency 670 THz. Interference fringes are observed on the screen.

(a) Explain how the interference fringes are formed.

.....

.....

.....

.....

.....

..... [3]

(b) Show that the wavelength of the light is 450 nm.

[2]

© UCLES 2014

(c) The separation of the maxima P and Q observed on the screen is 12 mm. The distance between the double slit and the screen is 2.8 m.

Calculate the separation of the two slits.

separation = ... m [3]

(d) The laser is replaced by a laser emitting red light. State and explain the effect on the interference fringes seen on the screen.

.....

.....

.....

..... [2]

© UCLES 2014

BLANK PAGE

Permission to reproduce items where third-party owned material protected by copyright is included has been sought and cleared where possible. Every reasonable effort has been made by the publisher (UCLES) to trace copyright holders, but if any items requiring clearance have unwittingly been included, the publisher will be pleased to make amends at the earliest possible opportunity.

Cambridge International Examinations is part of the Cambridge Assessment Group. Cambridge Assessment is the brand name of University of Cambridge Local Examinations Syndicate (UCLES), which is itself a department of the University of Cambridge.